EC 90 flat ∅90 mm, brushless, 160 watt

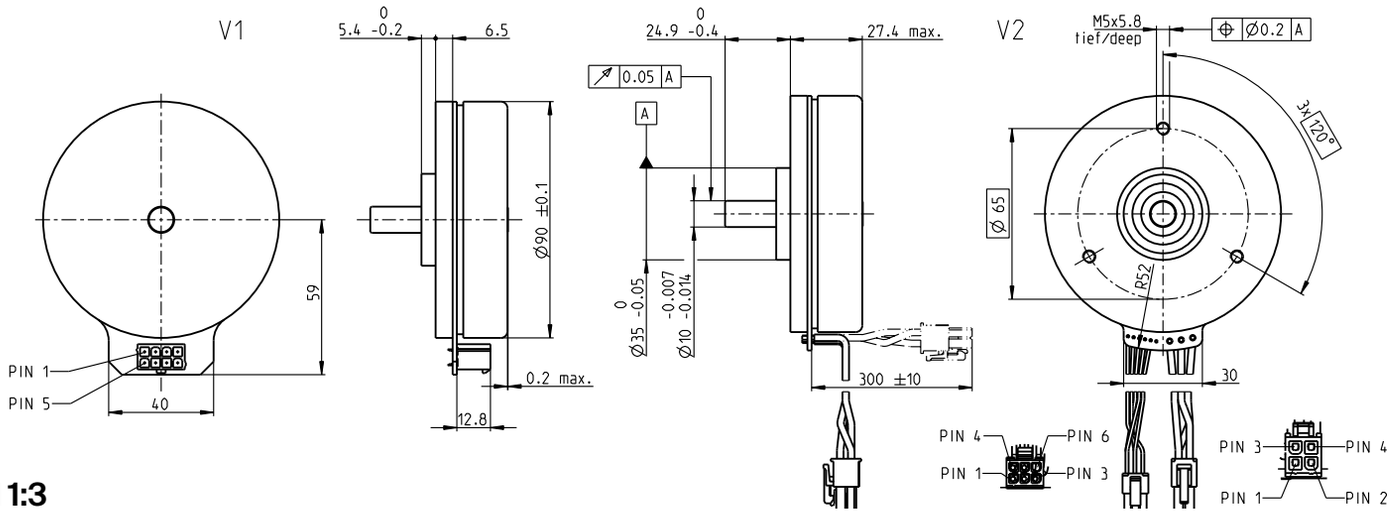

M 1:3

Stock program
Standard program
Special program (on request)

	Part numbers			
V1 with Hall sensors	586655	515458	505592	580047
V2 with Hall sensors and cables	607321	607322	607323	607324

Motor data					
Values at nominal voltage					
1 Nominal voltage	V	12	24	36	60
2 No load speed	rpm	3170	3170	3070	2600
3 No load current	mA	1320	658	420	197
4 Nominal speed	rpm	2700	2720	2630	2200
5 Nominal torque	mNm	462	462	457	464
6 Nominal current (max. continuous current)	A	12.9*	6.44	4.12	2.11
7 Stall torque	mNm	4930	5110	5000	4580
8 Stall current	A	211	113	70	30.1
9 Max. efficiency	%	84.7	85.1	84.9	84.3
Characteristics					
10 Terminal resistance phase to phase	Ω	0.0569	0.213	0.514	2
11 Terminal inductance phase to phase	mH	0.058	0.232	0.554	2.15
12 Torque constant	mNm/A	35.6	71.2	110	217
13 Speed constant	rpm/V	268	134	86.8	44.1
14 Speed/torque gradient	rpm/mNm	0.429	0.401	0.406	0.406
15 Mechanical time constant	ms	14.2	13.3	13.5	13.5
16 Rotor inertia	gcm²	3170	3170	3170	3170

Specifications

Thermal data	
17 Thermal resistance housing-ambient	2.37 K/W
18 Thermal resistance winding-housing	3.71 K/W
19 Thermal time constant winding	69.8 s
20 Thermal time constant motor	260 s
21 Ambient temperature	-40...+100°C
22 Max. winding temperature	+125°C
Mechanical data (preloaded ball bearings)	
23 Max. speed	5000 rpm
24 Axial play at axial load	0.14 mm
25 Radial play	preloaded
26 Max. axial load (dynamic)	34 N
27 Max. force for press fits (static)	440 N
(static, shaft supported)	8000 N
28 Max. radial load, 10 mm from flange	100 N
Other specifications	
29 Number of pole pairs	11
30 Number of phases	3
31 Weight of motor	630 g

Values listed in the table are nominal.

Connection V1		**V2** (sensors, AWG 24)
Pin 1	Hall sensor 1	Hall sensor 1
Pin 2	Hall sensor 2	Hall sensor 2
Pin 3	V_{Hall} 4.5...24 VDC	Hall sensor 3
Pin 4	Motor winding 3	GND
Pin 5	Hall sensor 3	V_{Hall} 4.5...24 VDC
Pin 6	GND	N.C.
Pin 7	Motor winding 1	
Pin 8	Motor winding 2	

	V2 (motor, AWG 16)
Pin 1	Motor winding 1
Pin 2	Motor winding 2
Pin 3	Motor winding 3
Pin 4	N.C.

Wiring diagram for Hall sensors see p. 69

Connector		**Part number**
Molex	46015-0806	43025-0600
Molex		39-01-2040

Connection cable for V1	
Universal, L = 500 mm	**339380**
to EPOS4, L = 500 mm	**354045**

Operating range

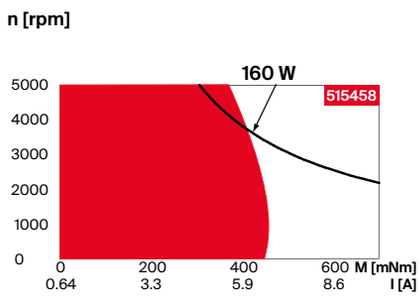

Comments

Continuous operation
In observation of above listed thermal resistance (lines 17 and 18) and an ambient temperature of 25°C, the maximum permissible winding temperature will be reached during continuous operation = thermal limit.

Short term operation
The motor may be briefly overloaded (recurring).

Assigned power rating

Modular system

Details on catalog page 56

Gear
444_GP 52 C
458_GB 80[1]
459_GB 12[1]
460_GB 9[1]
461_GB 65[1]

Sensor
531_Encoder MILE

Motor Control
547_DEC Module 50/5
551_ESCON Module 50/4 EC-S
551_ESCON Module 50/5
552_ESCON Module 50/8 HE
553_ESCON 50/5, 70/10
557_ESCON2 Micro 60/5
558_ESCON2 Module 60/12
558_ESCON2 Module 60/30
559_ESCON2 Compact 60/12
559_ESCON2 Compact 60/30
564_EPOS4 Module 50/5
565_EPOS4 Module 50/8
565_EPOS4 Module 50/15
567_EPOS4 Compact 50/5
567_EPOS4 Compact 50/8
568_EPOS4 Compact 50/15
569_EPOS4 50/5
569_EPOS4 70/15
571_EPOS4 Disk 60/12

Note: The cable alignment relative to the mounting holes of the gearhead is not defined.
[1]on request
*In combination with EPOS4 positioning controllers, the connector technology limits the nominal current (max. continuous current load) is limited to 11 A.

© 2025 maxon. All rights reserved. February edition. Subject to change.